ED. 06/2011

HESHBON®

PART CATALOGUE

HT-200

TIRE CHANGER

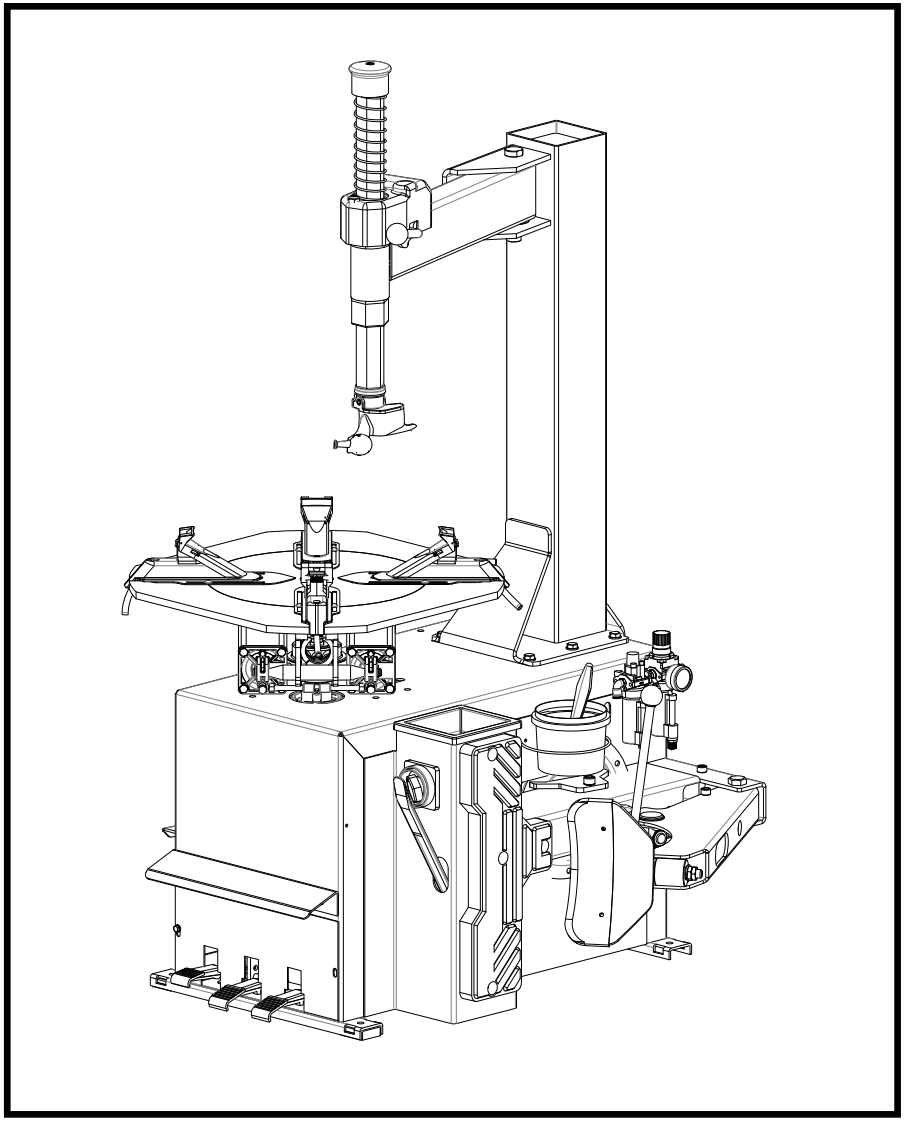

TAV.1.1	BODY	ED. 06/11

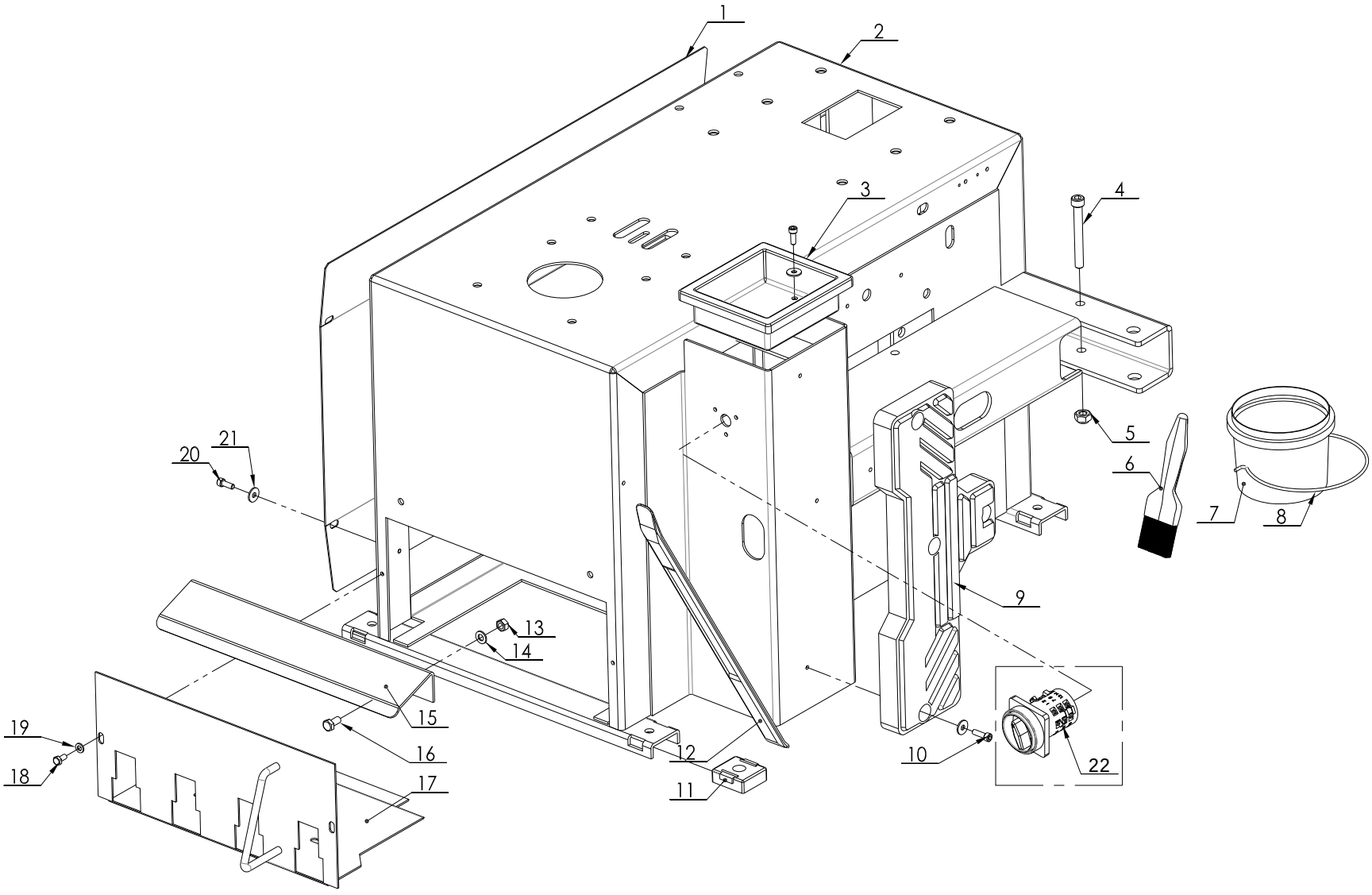

REV. 01 2011

TAV.1.1	BODY	ED. 06/11

ITEM	PART NUMBER	DESCRIPTION	QTY	REMARK
1	YC1-3001800	Side cover	1	
2	106B-2401001	Shell	1	
3	202W-3018260	Cover	1	
4	0202067	Screw M10X85 - GB/T70.1	1	
5	0204005	Self-locking nut M10 - GB/T889.1	1	
6	0511063	Grease brush	1	
7	YC1-4299984	Grease cup	1	
8	YC1-3000069	Spring	1	
9	YC1-3002102	Wheel support	1	
10	0202033	Screw M6X20 - GB/T70.1	4	
11	YC1-3002099	Plastic foot	4	
12	YC1-3006970	Bead lifting lever	1	
13	0203029	Nut M8 - GB/T6170	2	
14	0205008	Washer D.8 - GB/T97.1	2	
15	YC1-3011970-1	Front panel	1	
16	0201026	Screw M8X16 - GB/T5783	2	
17	YC3-2412452-C	Pedal support	1	
18	0201011	Screw M6X12 - GB/T5783	2	
19	0205006	Washer D.6 - GB/T97.1	2	
20	0202032	Screw M6X16 - GB/T70.1	5	
21	0205007	Washer D.6 - GB/T96	9	
22	0505008	Dual speed switch	1	Optional only for 3PH

TAV.2.1	HORIZ. AND VERT. ARMS	ED. 06/11

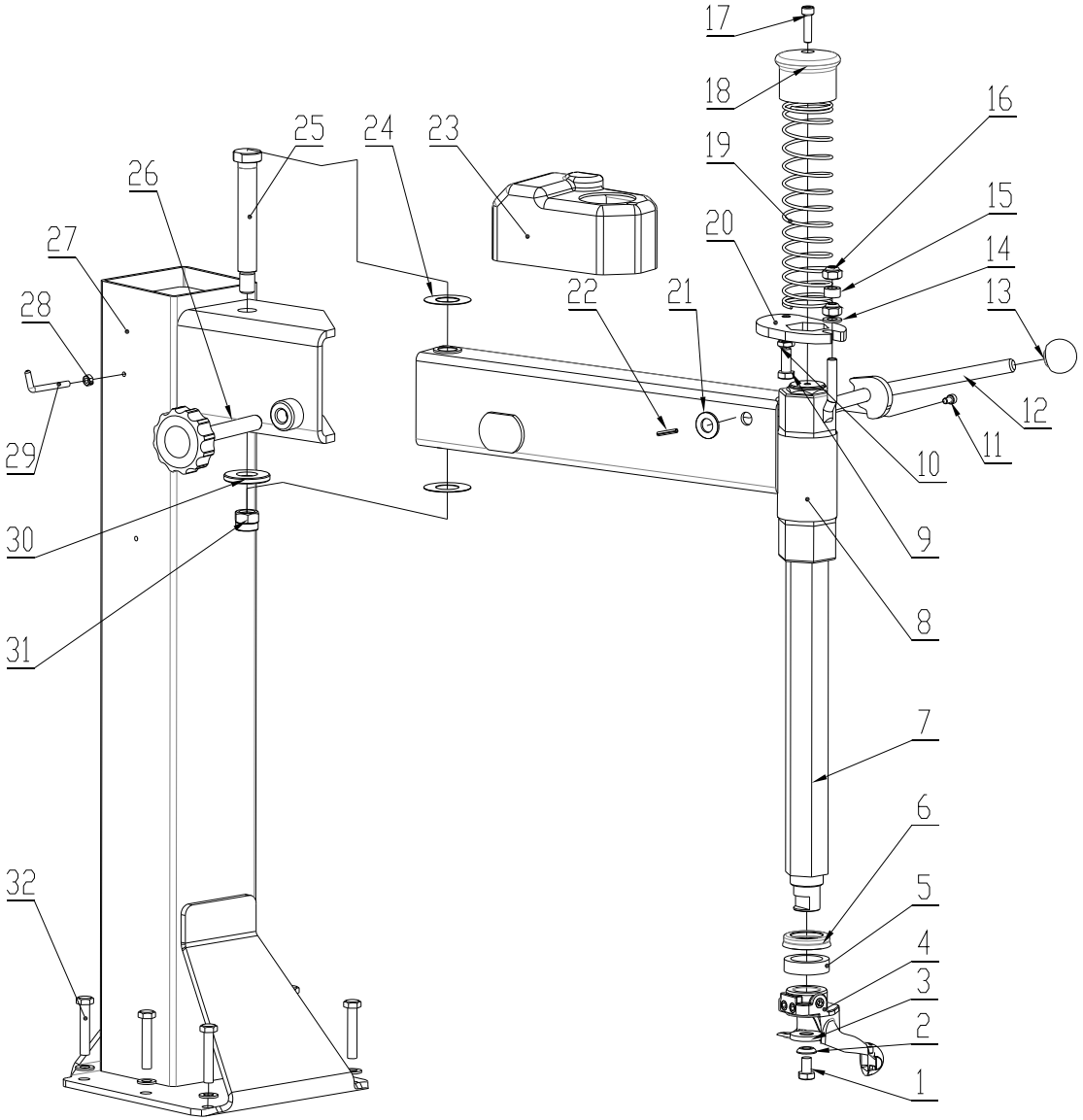

50

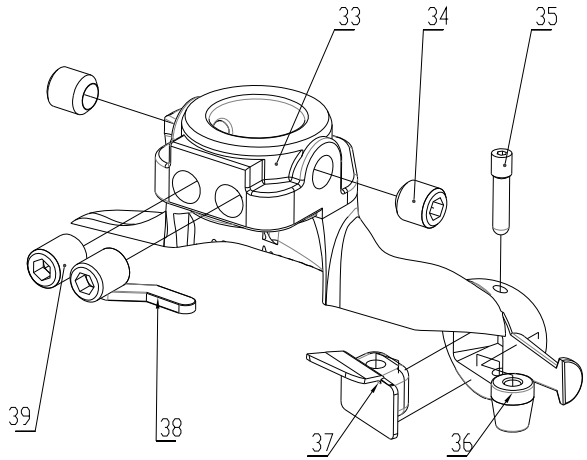

REV. 01 2011

TAV.2.1	HORIZ. AND VERT. ARMS	ED. 06/11

ITEM	PART NUMBER	DESCRIPTION	QTY	REMARK
1	0201059	Screw M10X16 - GB/T5783	1	
2	YC1-4295805	Spherical washer	1	
3	YC1-4295804	Conical washer	1	
4	YC1-2002215	Mounting tool unit	1	
5	YC1-3002601	Shock absorber	1	
6	YC1-3002602	Shock absorber protection	1	
7	YC1-3015586	Hexagonal arm	1	
8	YC1-2415589A	Horizontal arm	1	
9	0201048	Copper screw GB/T5781 M10X25	1	
10	0204012	Nut M10 - GB/T6172.1	1	
11	0202030	Screw M6X10 - GB/T70.1	1	
12	YC1-2407085	Arm locking lever	1	
13	YC1-4299952	Knob	1	
14	0205011	Washer D.10 - GB/T97.1	7	
15	YC1-3012632	Rubber spacer	1	
16	0204005	Nut M10 - GB/T889.1	2	
17	0202049	Screw M8X30 - GB/T70.1	1	
18	YC1-3001759	Arm knob	1	
19	YC1-3005407	Spring	1	
20	YC1-3015567	Arm locking plate	1	
21	0205017	Washer D.14 - GB/T97.1	1	
22	0213003	Elastic pin 4X25 - GB/T879.1	1	
23	YC1-3012631	Arm frame	1	
24	YC1-4397898	Steel shim	2	
25	YC1-3015565	Pivot	1	
26	YC1-2004002	Hand wheel	1	
27	YC1-2412123	Vertical post	1	

28	0203004	Nut M6 - GB52	1
29	YC1-3012978	Inflator hook	1
30	YC1-3007352	Washer	1
31	0204008	Self-locking nut M16 - GB/T889.1	1
32	0201055	Screw M10X55 - GB/T5782	6
33	YC1-3007801	Mounting tool	1
34	0209020	Screw M12X12 - GB/T80	2
35	YC1-3009018	Special screw	1
36	YC1-3000215	Peak roll	1
37	YC1-3006689	Plastic insert	1
38	YC1-3013650	Plastic insert	1
39	0209015	Screw M12X16 - GB/T80	2

TAV.3.1	PEDAL BOX	ED. 06/11

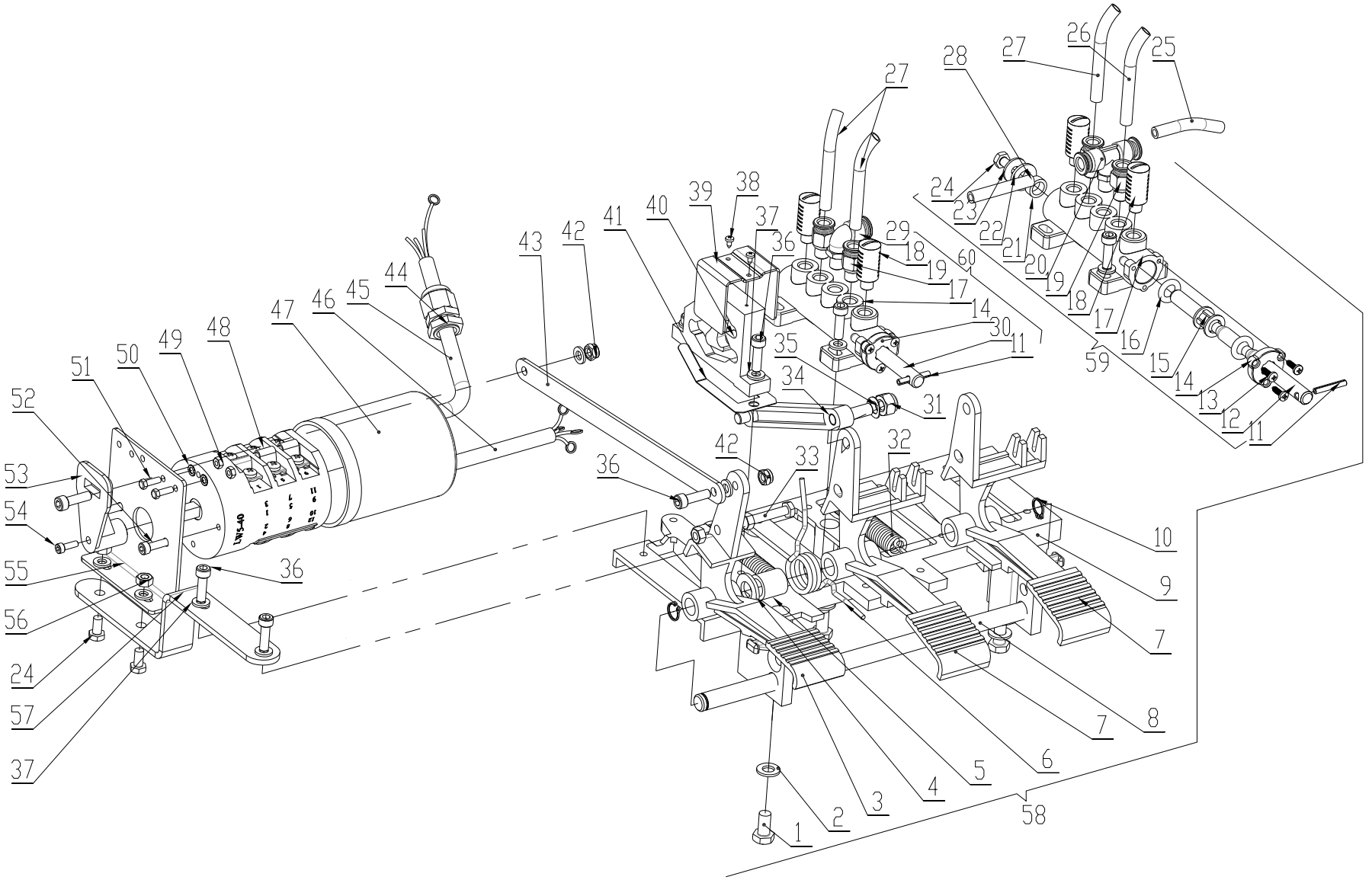

REV. 01 2011

TAV.3.1	PEDAL BOX	ED. 06/11

ITEM	PART NUMBER	DESCRIPTION	QTY	REMARK
1	0201026	Screw M8X16 - GB/T5783	3	
2	0205008	Washer D.8 - GB/T97.1	3	
3	YC1-3002157	Pedal A	1	
4	0205013	Washer D.12 - GB/T97.1	1	
5	YC1-3007953	Bush	1	
6	YC1-3000142	Pedal control spring	1	
7	YC1-3002159	Pedal B	2	
8	YC1-3003094	Pedal alignment pin	1	
9	YC1-3002161	Pedal box base	1	
10	0212001	Seeger D.12 - GB/T894.1	2	
11	0213003	Pin 4X25 - GB/T879.1	2	
12	YC1-3007598	Valve pin 3	1	
13	0207032	Self-tapping screw 3.5X13 - GB/T845	6	
14	YC1-3001585	Flange	2	
15	YC1-3001584	Space	10	
16	YC1-4299000	O-ring 17X4	12	
17	YC1-3001583	Valve body	2	
18	0306059	Silencer 1/8	4	
19	0306045	Quick union 8-1/8	4	
20	0306023	Quick T union 8-1/8	1	
21	YC1-4197629	Nylon washer	1	
22	0205011	Washer D.10 - GB/T97.1	1	
23	0205007	Washer D.6 - GB/T96	1	
24	0201011	Screw M6X12 - GB/T5783	3	
25	0306097	Rilsan hose 8X5 L=1000	1	
26	0306097	Rilsan hose 8X5 L=700	1	
27	0306097	Rilsan hose 8X5 L=850	3	

28	0306097	Rilsan hose 8X5 L=70	1
29	0306033	90° rotation union 8-1/8	1
30	YC1-3002442	Valve pin 1	1
31	0204004	Self-locking nut M8GB/T889.	1
32	YC1-3013333	Pedal return spring	2
33	0201016	Screw M6X50 - GB/T5782	1
34	YC1-4299912	Connection rod	1
35	0215019	Curved spring washer D.8 - GB/T860	1
36	0202033	Screw M6X20 - GB/T70.1	10
37	0205006	Washer D.6 - GB/T97.1	12
38	0207034	Self-tapping screw 2.9X6.5 - GB/T845	2
39	YC1-3099910	Connecting rod guide	1
40	YC1-4299913	Double cam	1
41	YC2-4299910	Forked leaf spring	1
42	0204003	Self-locking nut M6 - GB/T889.1	2
43	YC1-3015341	Connecting rod	1
44	0507115	Cable holder	1
45	0506016	Power cable L=3500	1
46	0506016	Motor cable L=1500	1
47	YC1-3015344	Reverser cover	1
48	0505009	Reverser 40A	1
49	0203002	Nut M4 - GB52	2
50	0211016	Toothed washer D.4	2
51	0201004	Screw M4X12 - GB/T5781	2
52	0202021	Screw M5X20 - GB/T70.1	2
53	YC1-3000175	Reverser lever	1
54	0202004	Screw M4X12 - GB/T70.1	1

55	YC1-3015340	Reverser support	1
56	0203004	Nut M6 - GB52	4
57	YC1-3015342	Support	1
58	YC1-2005000	Pedal control unit	1
59	YC1-2006297	Bead breaker valve unit	1
60	YC1-2002529	Turntable valve unit	1

TAV.4.1	BEAD BREAKER	ED. 06/11

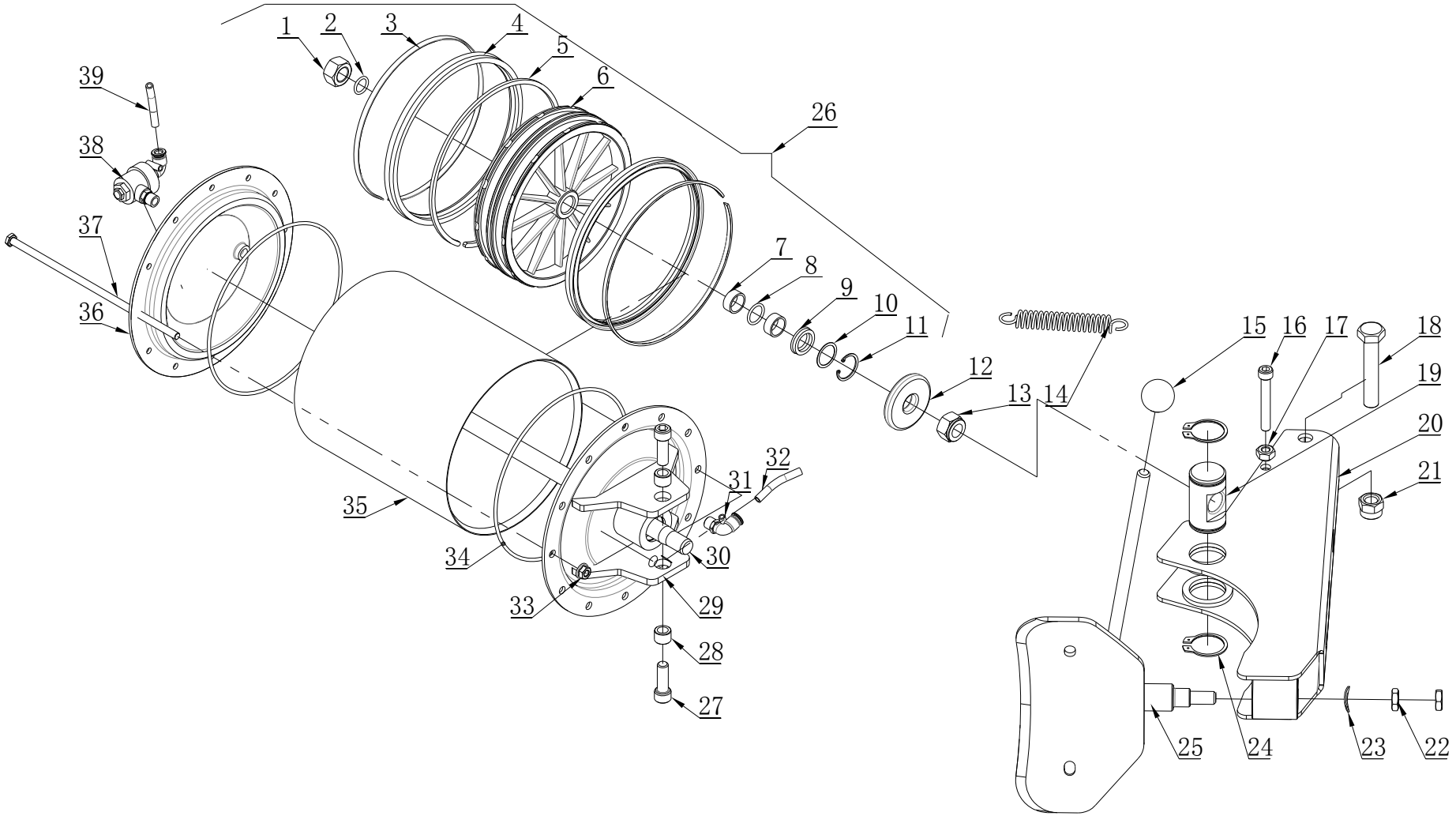

TAV.4.1	BEAD BREAKER	ED. 06/11

ITEM	PART NUMBER	DESCRIPTION	QTY	REMARK
1	0203022	Nut M18X1.5 - GB/T6171	1	
2	0309084	O-ring 16X2.65	1	
3	C207010008	Seal support ring	2	
4	C207010004	Seal 188X200X12	2	
5	C207010001	Guiding ring	1	
6	C207010002	Piston	1	
7	0305041	Guiding ring 67X9.5X2	2	
8	0606004	O-ring 20X2.75	1	
9	0606016	Scraper 20X30X7	1	
10	YC1-4398146	Washer	1	
11	0211004	Seeger D.30 - GB/T893.1	1	
12	106B-3006001	Shock absorber	1	
13	0204009	Self-locking nut M18 - GB/T889.1	1	
14	YC1-3000114A	Arm spring	1	
15	YC1-4299952	Knob	1	
16	0202057	Screw M10X70 - GB/T70.1	1	
17	0204005	Self-locking nut M10 - GB/T889.1	1	
18	0201099	Screw M16X90 - GB/T5782	1	
19	YC1-3008990	Pivot pin	1	
20	YC1-2415574	Bead breaker arm	1	
21	0204008	Self-locking nut M16 - GB/T889.1	1	
22	0204013	Nut M14 - GB/T6172.1	2	
23	0211015	Elastic washer D.14	1	
24	0212008	Seeger D.40 - GB/T894.1	2	
25	YC1-2412271	Bead breaker plate	1	
26	YC1-2015572F	Bead breaker cylinder	1	
27	0202071	Screw M12X35 - GB/T70.1	2	

28	YC1-3015573	Bush	2
29	C207010100	Front flange	1
30	YC1-3015834-B	Piston rod	1
31	0306032	90° quick union 8-1/4	1
32	0306097	Rilsan hose 8X5 L=700	1
33	0204025	Flange nut M8 - GB/T6177.1	12
34	0606011	O-ring 195X3.55	2
35	C207010006	Cylinder liner	1
36	C207010007	Back flange	1
37	C207010005	Screw M8X255 - GB/T5782	12
38	0303160	Discharge valve	1
39	0306097	Rilsan hose 8X5 L=1000	1

TAV.5.1	SELF-CENTERING TURNTABLE	ED. 06/11

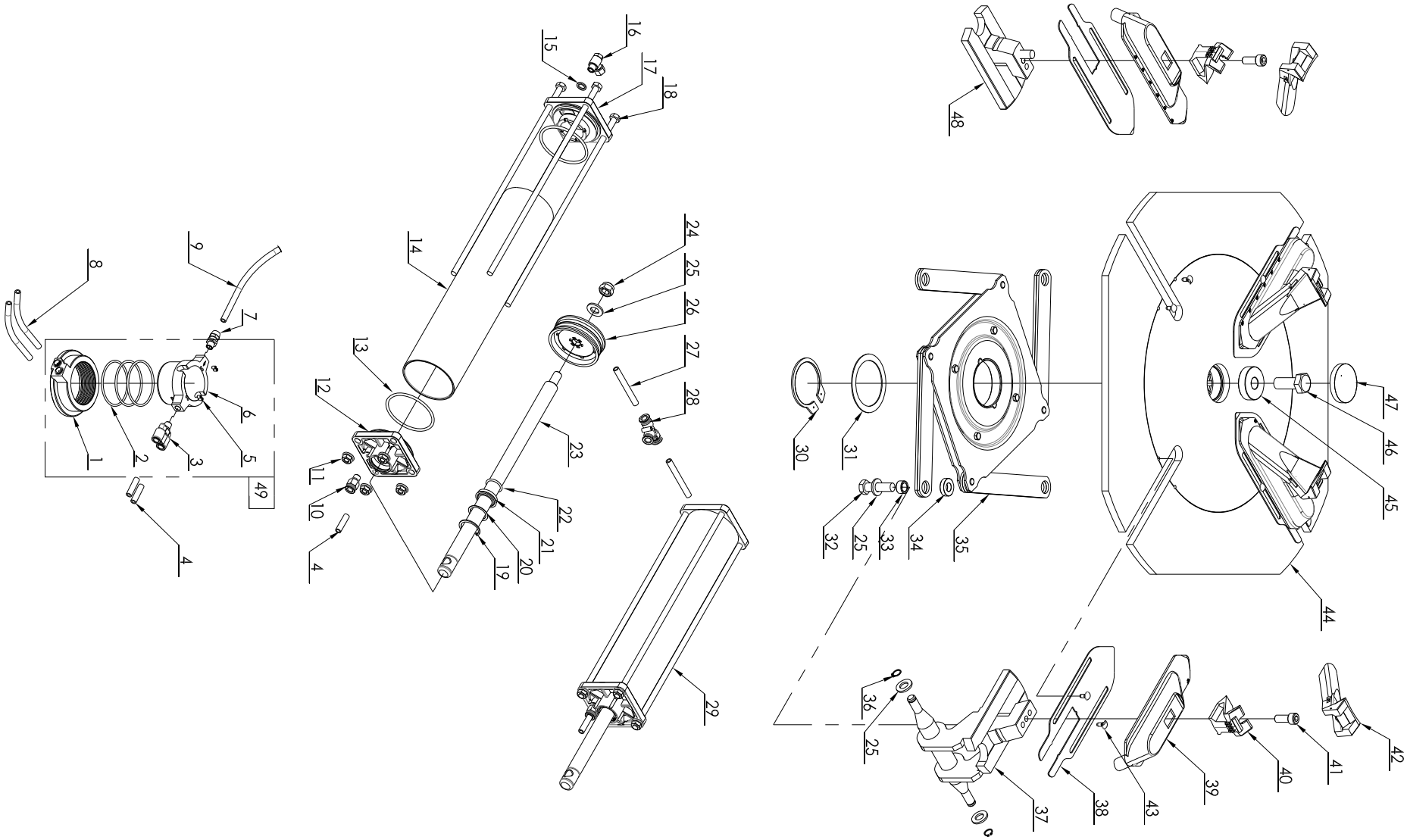

TAV.5.1	SELF-CENTERING TURNTABLE	ED. 06/11

ITEM	PART NUMBER	DESCRIPTION	QTY	REMARK
1	YC1-2003001	Outer element of rotation union	1	
2	GB/T3452.1-1992	O-ring 60x2.65	3	
3	0306001	Quick T union 8-1/8	1	
4	0306097	Rilsan hose 8X5 L=270	4	
5	0209043	Screw M4X6 - GB/T77	4	
6	YC1-4298956-2	Inner element of rotation union	1	
7	0306069	Rotation union 8-1/8	1	
8	0306097	Rilsan hose 8X5 L=850	2	
9	0306097	Rilsan hose 8X5 L=320	1	
10	0306142	90° quick union 8-1/8	2	
11	0204025	Flange nut M8 - GB/T6177.1	4	
12	YC1-3015024	Back flange	1	
13	GB/T3452.1	O-ring 75X3.55	2	
14	YC1-3008042	Cylinder liner	1	
15	0306106-1	Nylon washer	2	
16	0306106	90° rotation union 8-1/8	2	
17	YC1-3015023	Front flange	1	
18	YC1-3007941	Special screw	4	
19	0211004	Seeger D.30 - GB/T893.1	1	
20	YC1-4398146	Washer	1	
21	0606016	Scraper 20X30X7	1	
22	GB/T3452.1	O-ring 20X2.75	1	
23	YC1-3002901	Piston rod	1	
24	0204007	Nut M12 - GB/T889.1	1	
25	0205013	Washer D.12 - GB/T97.1	9	
26	YC1-4198856	Piston	1	
27	0306097	Rilsan hose 8X5 L=70mm	2	

YC1-2002215

28	0306022	Quick T union D.8	1
29	YC1-2008060	Turntable cylinder	1
30	0212011	Seeger D.65 - GB/T894.1	1
31	YC1-3006869-A	Connection rod spacer	1
32	0201072	Screw M12X1.25X45 - GB/T5786	4
33	YC1-3006880	Connection rod spacer	4
34	YC1-3006879	Spacer	4
35	YC1-2016001	Turntable flange	1
36	0212001	Seeger D.12	4
37	YC1-2415756	Slide guide	2
38	YC1-3015169	Turntable plate	4
39	YC1-3006255	Slide	4
40	YC1-3002297	Oversize clamp	4
41	0202061	Screw M10X25 - GB/T70.1	4
42	YC1-3001468	Clamp cover	4
43	YC1-3015187	Rivet	8
44	YC1-2112865	Turntable	1
45	YC1-3009778	Washer	1
46	0201100	Screw M16X40 - GB/T5786	1
47	YC1-3000062	Turntable cap	1
48	YC1-3015755-A	Slide guide	2
49	YC1-2003000	Rotation union	1

TAV.6.0	MOTOR – REDUCTION GEAR GROUP	ED. 06/11

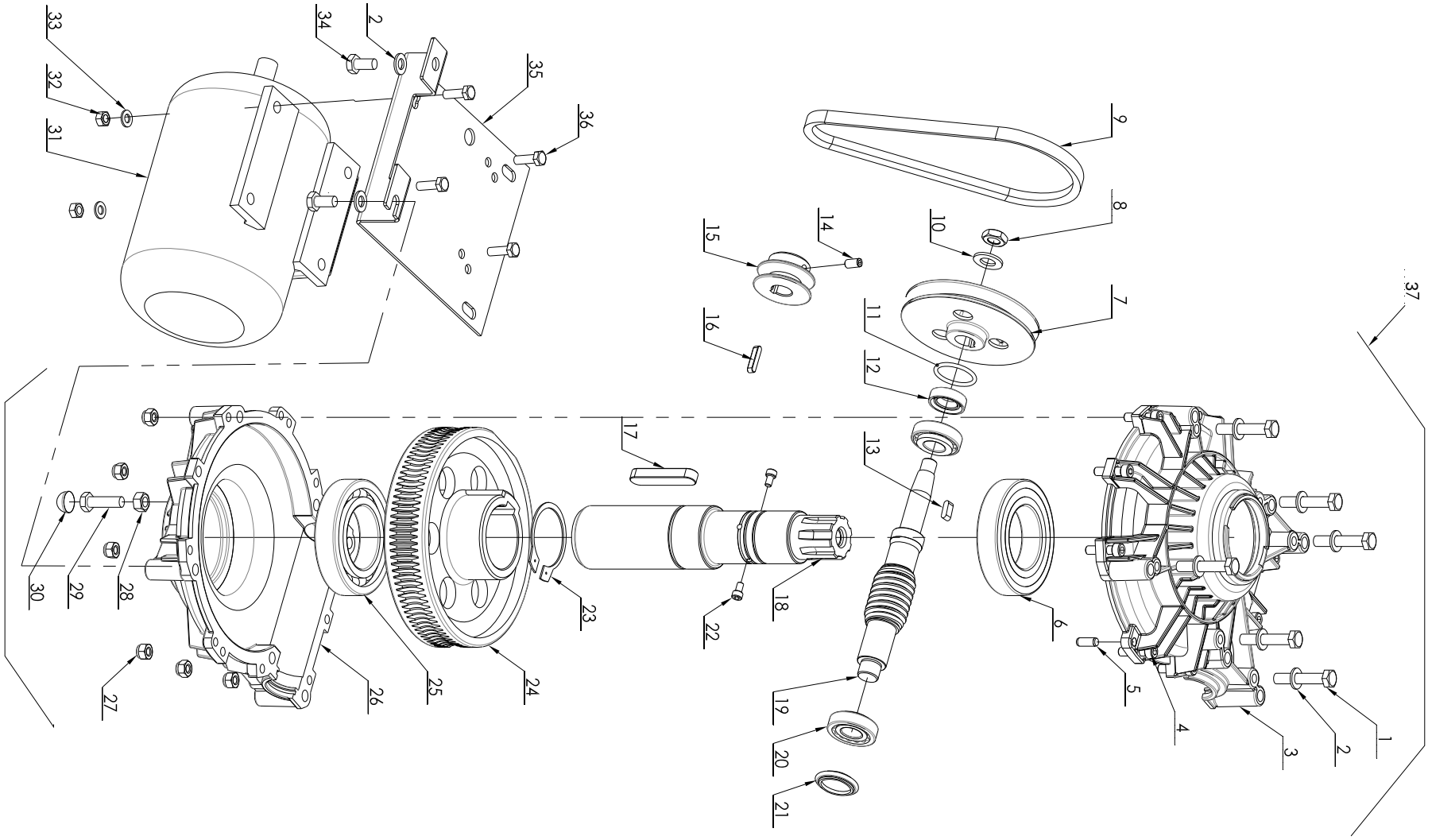

REV. 01 2011

ITEM	PART NUMBER	DESCRIPTION	QTY	REMARK
1	0201069	Screw M10X55 - GB/T5780	6	
2	0205011	Washer D.10 - GB/T97.1	8	
3	YC1-3010872	Top gear box	1	
4	0202049	Screw M8X30 - GB/T70.1	10	
5	0213011	Elastic pin 8X20- GB/T119.1	2	
6	0214006	Bearing 6212-2RS - GB/T276	1	
7	YC1-3199596	Gear box pulley	1	
8	0204013	Nut M14 - GB/T6172.1	1	
9	GB/T11544-1997	V belt A580	1	
10	0205017	Washer D.14 - GB/T97.1	1	
11	0606005	O-ring 34.5X3.55 - GB/T3452.1	1	
12	YC1-4296942	Seal	1	
13	0213028	Tab 6X18 - GB/T1096	1	
14	0209009	Screw M8X16 - GB/T80	1	
15	YC1-3000166	Motor pulley	1	
16	202W-ZYDJPJ	Tab 6X30 - GB/T1096	1	
17	0213027	Tab 16X70 - GB/T1096	1	
18	YC1-3010885	Helical gear stud	1	
19	YC1-3010883	Worm	1	
20	0214007	Bearing 30204 - GB/T297	2	
21	YC1-3010886	Seal cap	1	
22	0202030	Screw M6X10 - GB/T70.1	2	
23	0212010	Seeger D.60 - GB/T894.1	1	
24	YC1-3015537	Helical gear	1	
25	0214005	Bearing 6212 - GB/T276	1	
26	YC1-3010873	Bottom gear box	1	
27	0204004	Nut M8 - GB/T889.1	10	

28	0203009	Nut M10 - GB52	1
29	0201050	Screw M10X35 - GB/T5783	1
30	YC1-3000164	Spherical washer	1
31a	0509065	1PH motor 230V 0.75KW	1
31b	0509053	3PH motor 230V/400V 0.55KW	1
31c	0509050	3PH double speed motor 400V 0.8/1.1KW	1
31d	0509097	1PH motor 110V 1.1KW	1
32	0203029	Nut M8 - GB/T6170	4
33	0205008	Washer D.8 - GB/T97.1	4
34	0201062	Screw M10X20 - GB/T5783	2
35	YC1-3000149A	Motor support	1
36	0201038	Screw M8X25 - GB/T5783	4
37	YC1-2011967	Reduction gear unit	1

TAV.8.1	AIR LUBRICATOR GROUP	ED. 06/11

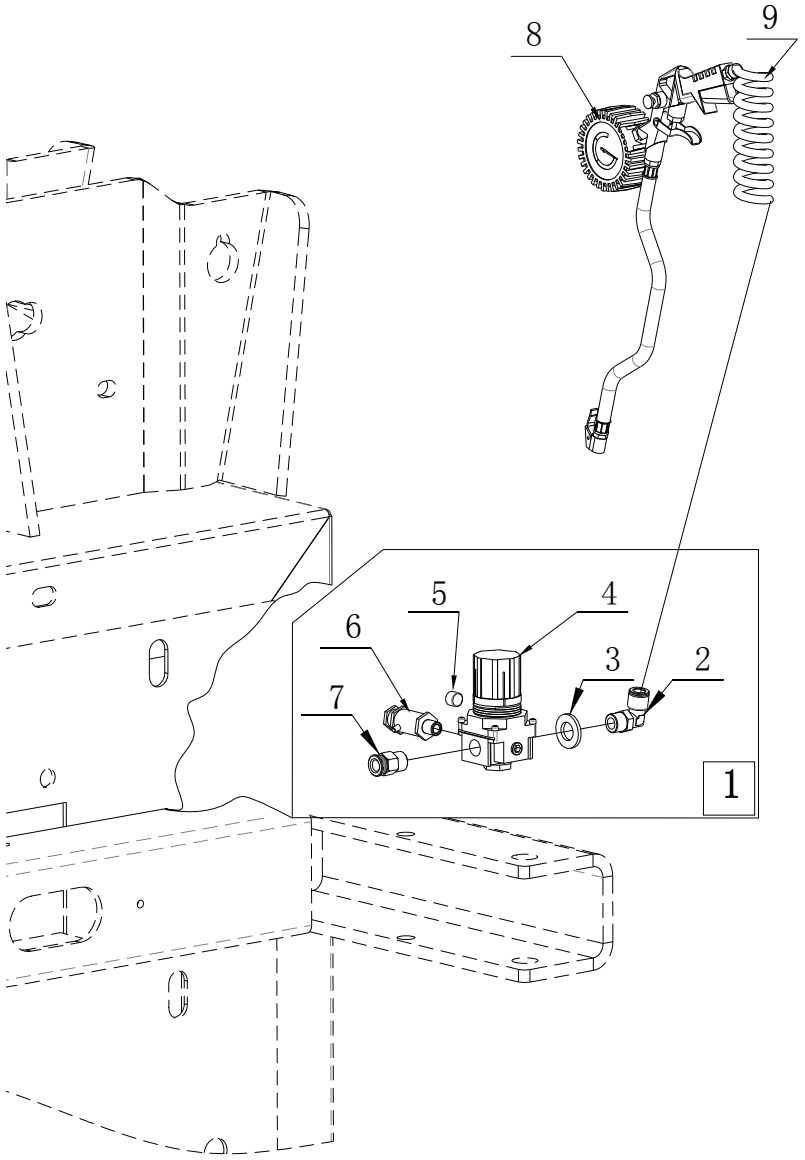

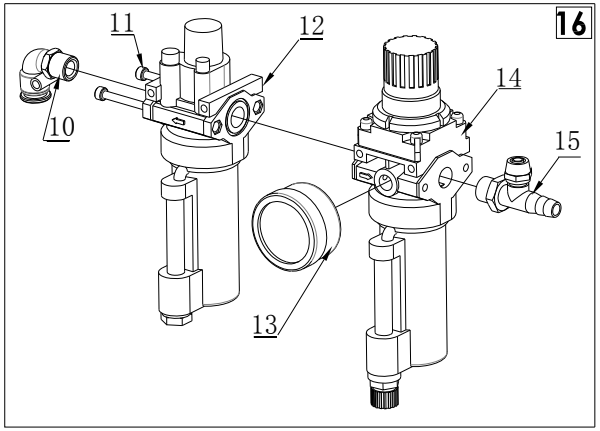

TAV.8.1	AIR LUBRICATOR GROUP	ED. 06/11

ITEM	PART NUMBER	DESCRIPTION	QTY	REMARK
1	YC2-2010781-1	Safety valve unit 3.5bar	1	Optional for CE
2	306037	90° quick union 8-1/4	1	
3	205013	Washer D.12 - GB/T97.1	1	
4	307039	Pressure regulator 3.5bar	1	
5	305014	Plug 1/8	1	
6	306106	Pressure relief valve 1/8 5.5bar	1	
7	306144	Quick union 8-1/4	1	
8	306011	Inflator	1	
9	306157	Rilsan spiral hose 8X5 L=2000	1	
10	306032	90° quick union 8-1/4	1	
11	202012	Screw M4X50 - GB/T70.1	2	
12	307065	Lubricator NL-200	1	
13	306052	Pressure gauge	1	
14	307065	Filter regulator NFR-200	1	
15	306007	T union 8-1/4	1	
16	YC2-2012326-1	Lubricator + filter regulator	1	